DRAWING NO. SE212356

REV	DATE	DESCRIPTION	ECO	BY	C'H'K.
B	02/11/2013 00:00:00 AM	CAT.# YAZ2CTC10 ADDED TO TABLE	30459	RG	MA

CATALOG NO.	CONDUCTOR CODE (AWG)	CONDUCTOR NAVY 5	BOLT SIZE	FIG. NO.	DIMENSIONS B ±.06	C ±.04	H REF.	K DIA. ±.02	L ±.09	N ±.04	O.D. ±.01	T REF.	Z MIN.	INSTALLATION TOOLING (# CRIMPS) DIE INDEX	COLOR CODE	MECHANICAL MD7-34R MD6	OUR840	Y2MR 6	HYDRAULIC BCT500 Y500CT	Y34A 8	Y750 Y35, BAT35 Y39, BAT750	Y46 4	Y45 3	DIELESS (# CRIMPS)	WIRE STRIP LENGTH
YAZ2CTC10	#2 AWG. [-----]	60	#10 M5	1	1.25 [32]	.60 [15]	--	.21 [5]	2.09 [53]	.25 [6]	.42 [11]	.11 [3]	.26 [7]	10	BROWN	W2CVT W2CRT (2)	W2CVT W2CRT (2)	-----	W2CVT W2CRT (2)	A2CR (2)	U2CRT (2)	U2CRT (2)	U2CRT (2)	MECHANICAL: MY29-11(1) HYDRAULIC Y644, Y644M BAT644M Y644MBH, Y1000 Y1000BH (1)	1-5/16
YAZ2CTC14				1			--		2.21 [56]																
YAZ2CTC1445			1/4 [M6]	2			1.42 [36]	.27 [7]	2.01 [51]	.31 [8]			.33 [8]												
YAZ2CTC1490				3			1.74 [44]		.95 [24]																
YAZ2CTC516				1			--		2.27 [58]																
YAZ2CTC51645			5/16 [M8]	2			1.42 [36]	.33 [8]	2.08 [53]	.34 [9]			.36 [9]			W2CVT W2CRT (2)	W2CVT W2CRT (2)		W2CVT W2CRT (2)						
YAZ2CTC51690	#2 AWG. [-----]	60		3	1.25 [32]	.60 [15]	1.74 [44]		1.01 [26]		.42 [11]	.11 [3]		10	BROWN			----		A2CR (2)	U2CRT (2)	U2CRT (2)	U2CRT (2)		1-5/16

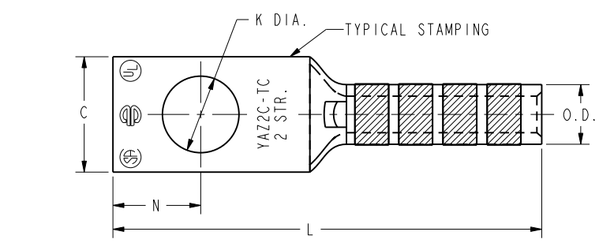

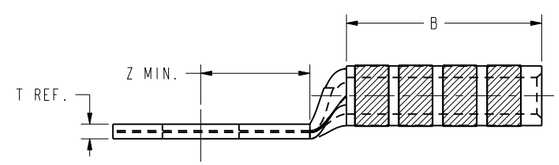

FIG. 1

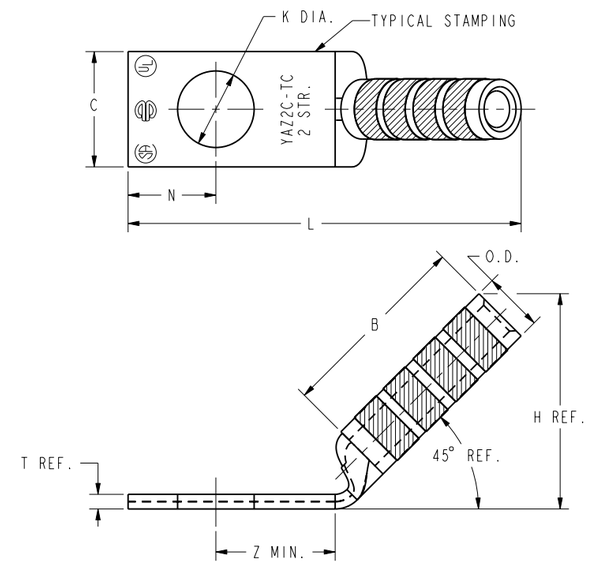

FIG. 2

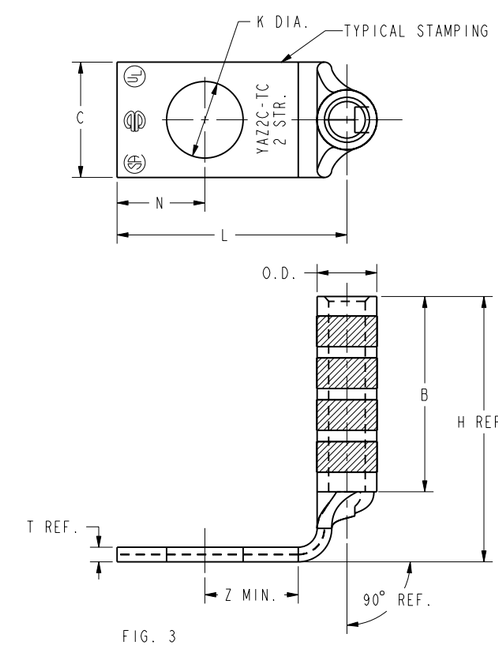

FIG. 3

NOTES:

1. MATERIAL: COPPER TUBING.
2. FINISH: TIN PLATED
3. CATALOG # PT6515 ADAPTOR IS REQUIRED TO USE "U" DIES IN Y45 SERIES TOOLS.
4. CATALOG # PUADP-1 ADAPTOR IS REQUIRED TO USE "U" DIES IN Y46 SERIES TOOLS.
5. NAVY CABLE SIZE MAY BE OMITTED ON SOME SIZES BECAUSE OF SPACE LIMITATIONS.
6. PERMANENT DIE IN TOOLING.
7. DIMENSIONS, METRIC WIRE, & METRIC BOLT SIZES IN BRACKETS [ ] ARE IN MILLIMETERS. DIMENSIONS ARE ROUNDED OFF TO THE NEAREST MILLIMETER, UNLESS OTHERWISE NOTED, AND ARE FOR REFERENCE ONLY.
8. FOR USE BY CUSTOMERS THAT HAVE THIS HYPRESS™. NO NEW Y34A HYPRESS™ TOOLS ARE BEING PROCESSED.

TO ORDER BURNDY® PRC

HYLUG™ (ONE HOLE CODE)

ITEM NO:	NA
CAT. NO:	YAZ2C-TC- (TABLE)
DRAWN BY:	D.BOISVERT 02/03/2000
CHECKER:	K.MCCARTHY 04/05/2000
DSN APPVL:	J.MICHAUD 05/04/2000
MFG APPVL:	N/A --
QA APPVL:	S.BROWN --
MKT APPVL:	N/A --
PROD FAM:	--
PROJECT #:	--
DOCUMENT TYPE:	Sales
REL LEVEL:	Released

BURNDY

SCALE: NTS

SIZE: D

DRAWING NO: SE212356

REV: B

SHEET 11 OF 40

REV: PE0200